Work Order ID 64909

Wednesday, December 22, 2010 2:58:06 PM

Item ID: D350-591-312 **Accept** **Setup Start** **Stop**

Revision ID:

Item Name: Heli-Access-Step, Long RH

Start Date: 12/22/2010 **Start Qty:** ~~10.00~~ 8.0 **Cust Item ID:**

Required Date: 1/24/2011 **Req'd Qty:** ~~10.00~~ **Customer:**

Reference:

Approvals: **Process Plan:** _____ **Date:** 10/12/22 **Tooling:** _____ **Date:** _____ **Run Start** **Stop**

QC: _____ **Date:** _____ **SPC (Y/N):** _____ **Date:** _____

Sequence ID/ Work Center ID	Operation Description	Set Up/ Run Hours	Tool ID	Tool #	Plan Code	Accept Qty	Reject Qty	Reject Number	Insp. Stamp
Draw Nbr	**Revision Nbr**								
D3272	Rev B								
100	DOCUMENT CONTROL	0.00							
DC	**Memo**	0.00							
Document Control	Photocopy bluefile and type labels as per PPP D350-591-312 CHG001								
110	Large Fab	0.00							
Large Fab	**Memo**	0.00							
Large Fab	1-Bevel end for welding FWD ONLY								

CK la CL 11/01/10

8 11/01/21

11.01.12 8

2-Weld Support using Jig DT8719, weld Fwd End Plate as per QSI 004 & Dwg D3272

A/R Aluminum Rod M108436 M115928

3-Grind End Plate flush

Dart Aerospace Ltd

W/O:		WORK ORDER CHANGES					
DATE	STEP	PROCEDURE CHANGE	By	Date	Qty	Approval Chief Eng / Prod Mgr	Approval QC Inspector

Part No: _____ **PAR #:** _____ **Fault Category:** _____ **NCR:** Yes No **DQA:** _____ **Date:** _____

Resolution: _____ **Disposition:** _____ **QA: N/C Closed:** _____ **Date:** _____

NCR:		WORK ORDER NON-CONFORMANCE (NCR)						
DATE	STEP	Description of NC Section A	Corrective Action Section B			Verification Section C	Approval Chief Eng	Approval QC Inspector
			Initial Chief Eng	Action Description Chief Eng	Sign & Date			

NOTE: Date & initial all entries

H:\fFORMS\Quality Assurance\approved QA\NCRWO RevE

Work Order ID 64909

Wednesday, December 22, 2010 2:58:06 PM

Item ID: D350-591-312 **Accept** **Setup Start** **Stop**

Revision ID:

Item Name: Heli-Access-Step, Long RH

Start Date: 12/22/2010 **Start Qty:** 10.00 **Cust Item ID:**

Required Date: 1/24/2011 **Req'd Qty:** 10.00 **Customer:**

Reference:

Run Start **Stop**

Approvals: **Process Plan:** _____ **Date:** _____ **Tooling:** _____ **Date:** _____

QC: _____ **Date:** _____ **SPC (Y/N):** _____ **Date:** _____

Sequence ID/ Work Center ID	Operation Description	Set Up/ Run Hours	Tool ID	Tool #	Plan Code	Accept Qty	Reject Qty	Reject Number	Insp. Stamp
120	QC9- Inspect visual per QSI004- Fusion Welds	0.00				(x8) ~~10~~	Ø	BE	11/01/13
QC	Memo	0.00							
Quality Control									
130	QC5- Inspect part completeness to step on W/O	0.00							
QC	Memo	0.00				~~8~~ RH			
Quality Control									
140	Chemical Conversion Coat per QSI005 4.1	0.00							
HandFinish	Memo	0.00				8RH			
Hand Finishing									

Dart Aerospace Ltd

W/O:		WORK ORDER CHANGES					
DATE	STEP	PROCEDURE CHANGE	By	Date	Qty	Approval Chief Eng / Prod Mgr	Approval QC Inspector

Part No: _____ **PAR #:** _____ **Fault Category:** _____ **NCR:** Yes No **DQA:** _____ **Date:** _____

Resolution: _____ **Disposition:** _____ **QA: N/C Closed:** _____ **Date:** _____

NCR:		WORK ORDER NON-CONFORMANCE (NCR)						
DATE	STEP	Description of NC Section A	Corrective Action Section B			Verification Section C	Approval Chief Eng	Approval QC Inspector
			Initial Chief Eng	Action Description Chief Eng	Sign & Date			

NOTE: Date & initial all entries

H:\fFORMS\Quality Assurance\approved QA\NCRWO RevE

Work Order ID 64909

Wednesday, December 22, 2010 2:58:06 PM

Item ID: D350-591-312 **Accept** **Setup Start**

Revision ID: **Stop**

Item Name: Heli-Access-Step, Long RH

Start Date: 12/22/2010 **Start Qty:** 10.00 **Cust Item ID:**

Required Date: 1/24/2011 **Req'd Qty:** 10.00 **Customer:**

Reference:

Run Start

Approvals: **Process Plan:** _____ **Date:** _____ **Tooling:** _____ **Date:** _____

Stop

QC: _____ **Date:** _____ **SPC (Y/N):** _____ **Date:** _____

Sequence ID/ Work Center ID	Operation Description	Set Up/ Run Hours	Tool ID	Tool #	Plan Code	Accept Qty	Reject Qty	Reject Number	Insp. Stamp
150	QC3- Inspect Part Finish	0.00				78			
QC	**Memo**	0.00							
Quality Control									
180		0.00							
Large Fab	Large Fab		11·01·18			8			
Large Fab	**Memo**	0.00							

1-Assemble Leg Assembly as per Dwg D3272.

2-Leave one rivet out until welding is complete.

3-Bevel Aft end for welding

4-Inspect for foreign object as per QSI 024

5-Weld Aft End Plate as per QSI 004 & Dwg D3272
A/R□□Aluminum Rod□ M108436

6-Grind End Plate flush

7-Install last rivet as per Dwg.

Dart Aerospace Ltd

W/O:		WORK ORDER CHANGES					
DATE	STEP	PROCEDURE CHANGE	By	Date	Qty	Approval Chief Eng / Prod Mgr	Approval QC Inspector

Part No: _____ **PAR #:** _____ **Fault Category:** _____ **NCR:** Yes No **DQA:** _____ **Date:** _____

Resolution: _____ **Disposition:** _____ **QA: N/C Closed:** _____ **Date:** _____

NCR:		WORK ORDER NON-CONFORMANCE (NCR)						
DATE	STEP	Description of NC Section A	Corrective Action Section B			Verification Section C	Approval Chief Eng	Approval QC Inspector
			Initial Chief Eng	Action Description Chief Eng	Sign & Date			

NOTE: Date & initial all entries

H:\fFORMS\Quality Assurance\approved QA\NCRWO RevE

Work Order ID 64909

Wednesday, December 22, 2010 2:58:06 PM

Item ID: D350-591-312 **Accept** **Setup Start** **Stop**

Revision ID:

Item Name: Heli-Access-Step, Long RH

Start Date: 12/22/2010 **Start Qty:** 10.00 **Cust Item ID:**

Required Date: 1/24/2011 **Req'd Qty:** 10.00 **Customer:**

Reference:

Approvals: **Process Plan:** _____ **Date:** _____ **Tooling:** _____ **Date:** _____ **Run Start** **Stop**

QC: _____ **Date:** _____ **SPC (Y/N):** _____ **Date:** _____

Sequence ID/ Work Center ID	Operation Description	Set Up/ Run Hours	Tool ID	Tool #	Plan Code	Accept Qty	Reject Qty	Reject Number	Insp. Stamp
190	QC9- Inspect visual per QSI004- Fusion Welds	0.00				8	0		BE 11/01/18
QC	Memo	0.00							
Quality Control									
200	QC5- Inspect part completeness to step on W/O	0.00				x8 RH			
QC	Memo	0.00							
Quality Control									
210	Chemical Conversion Coat per QSI005 4.1	0.00				VR RH			
HandFinish	Memo	0.00							
Hand Finishing									

Dart Aerospace Ltd

W/O:		WORK ORDER CHANGES					
DATE	STEP	PROCEDURE CHANGE	By	Date	Qty	Approval Chief Eng / Prod Mgr	Approval QC Inspector

Part No: _____ **PAR #:** _____ **Fault Category:** _____ **NCR:** Yes No **DQA:** _____ **Date:** _____

Resolution: _____ **Disposition:** _____ **QA: N/C Closed:** _____ **Date:** _____

NCR:		WORK ORDER NON-CONFORMANCE (NCR)						
DATE	STEP	Description of NC Section A	Corrective Action Section B			Verification Section C	Approval Chief Eng	Approval QC Inspector
			Initial Chief Eng	Action Description Chief Eng	Sign & Date			

NOTE: Date & initial all entries

H:\fFORMS\Quality Assurance\approved QA\NCRWO RevE

Work Order ID 64909

Wednesday, December 22, 2010 2:58:06 PM

Item ID: D350-591-312 **Accept** **Setup Start** **Stop**

Revision ID:

Item Name: Heli-Access-Step, Long RH

Start Date: 12/22/2010 **Start Qty:** 10.00 **Cust Item ID:**

Required Date: 1/24/2011 **Req'd Qty:** 10.00 **Customer:**

Reference:

Approvals: **Process Plan:** _____ **Date:** _____ **Tooling:** _____ **Date:** _____ **Run Start** **Stop**

QC: _____ **Date:** _____ **SPC (Y/N):** _____ **Date:** _____

Sequence ID/ Work Center ID	Operation Description	Set Up/ Run Hours	Tool ID	Tool #	Plan Code	Accept Qty	Reject Qty	Reject Number	Insp. Stamp
220	White Gloss(Ref:4.3.5.1) per QSI005 4.3-Alum	0.00							
Powdercoat	M115951					8	0	10-01-19.	
Powder Coating	**Memo** START TIME: 2:20 OVEN TEMPERATURE: 320° FINISH TIME: 2:50.	0.00							
230	Wing Walk as per dwg QSI005 4.4 Batch M115790	0.00							
HandFinish						8	0		
Hand Finishing	**Memo**	0.00							
240	QC3- Inspect Part Finish	0.00							
QC									
Quality Control	**Memo**	0.00							

Dart Aerospace Ltd

W/O:		WORK ORDER CHANGES					
DATE	STEP	PROCEDURE CHANGE	By	Date	Qty	Approval Chief Eng / Prod Mgr	Approval QC Inspector

Part No: _____ **PAR #:** _____ **Fault Category:** _____ **NCR:** Yes No **DQA:** _____ **Date:** _____

Resolution: _____ **Disposition:** _____ **QA: N/C Closed:** _____ **Date:** _____

NCR:		WORK ORDER NON-CONFORMANCE (NCR)						
DATE	STEP	Description of NC Section A	Corrective Action Section B			Verification Section C	Approval Chief Eng	Approval QC Inspector
			Initial Chief Eng	Action Description Chief Eng	Sign & Date			

NOTE: Date & initial all entries

H:\fFORMS\Quality Assurance\approved QA\NCRWO RevE

Work Order ID 64909

Wednesday, December 22, 2010 2:58:06 PM

Item ID: D350-591-312 **Accept** **Setup Start** **Stop**

Revision ID:

Item Name: Heli-Access-Step, Long RH

Start Date: 12/22/2010 **Start Qty:** 10.00 **Cust Item ID:**

Required Date: 1/24/2011 **Req'd Qty:** 10.00 **Customer:**

Reference:

Run Start **Stop**

Approvals: **Process Plan:** _____ **Date:** _____ **Tooling:** _____ **Date:** _____

QC: _____ **Date:** _____ **SPC (Y/N):** _____ **Date:** _____

Sequence ID/ Work Center ID	Operation Description	Set Up/ Run Hours	Tool ID	Tool #	Plan Code	Accept Qty	Reject Qty	Reject Number	Insp. Stamp
250	Pick Kit	0.00				11/1/10	SP		8x
Packaging	Memo	0.00							
Packaging									
260	QC4- 100% Inspect kits for completeness	0.00							
QC	Memo	0.00	Sulakl			ES RH			
Quality Control									
270	Packaging	0.00							
Packaging	Memo	0.00	Recd			11/1/24	SP		80
Packaging	Identify and pack for shipping as per PPPD350-591-312 Location: 1411								

Dart Aerospace Ltd

W/O:		WORK ORDER CHANGES					
DATE	STEP	PROCEDURE CHANGE	By	Date	Qty	Approval Chief Eng / Prod Mgr	Approval QC Inspector

Part No: _____ **PAR #:** _____ **Fault Category:** _____ **NCR:** Yes No **DQA:** _____ **Date:** _____

Resolution: _____ **Disposition:** _____ **QA: N/C Closed:** _____ **Date:** _____

NCR:		WORK ORDER NON-CONFORMANCE (NCR)						
DATE	STEP	Description of NC Section A	Corrective Action Section B			Verification Section C	Approval Chief Eng	Approval QC Inspector
			Initial Chief Eng	Action Description Chief Eng	Sign & Date			

NOTE: Date & initial all entries

H:\fFORMS\Quality Assurance\approved QA\NCRWO RevE

Work Order ID 64909

Wednesday, December 22, 2010 2:58:06 PM

Item ID: D350-591-312 **Accept** **Setup Start** **Stop**

Revision ID:

Item Name: Heli-Access-Step, Long RH

Start Date: 12/22/2010 **Start Qty:** 10.00 **Cust Item ID:**

Required Date: 1/24/2011 **Req'd Qty:** 10.00 **Customer:**

Reference:

Run Start **Stop**

Approvals: **Process Plan:** _____ **Date:** _____ **Tooling:** _____ **Date:** _____

QC: _____ **Date:** _____ **SPC (Y/N):** _____ **Date:** _____

Sequence ID/ Work Center ID	Operation Description	Set Up/ Run Hours	Tool ID	Tool #	Plan Code	Accept Qty	Reject Qty	Reject Number	Insp. Stamp
280	QC21- Final Inspection - Work Order Release	0.00				CK	11/01/24		
QC Quality Control	**Memo**	0.00							

NF
10-01-24

Dart Aerospace Ltd

W/O:		WORK ORDER CHANGES					
DATE	STEP	PROCEDURE CHANGE	By	Date	Qty	Approval Chief Eng / Prod Mgr	Approval QC Inspector

Part No: _____ **PAR #:** _____ **Fault Category:** _____ **NCR:** Yes No **DQA:** _____ **Date:** _____

Resolution: _____ **Disposition:** _____ **QA: N/C Closed:** _____ **Date:** _____

NCR:		WORK ORDER NON-CONFORMANCE (NCR)						
DATE	STEP	Description of NC Section A	Corrective Action Section B			Verification Section C	Approval Chief Eng	Approval QC Inspector
			Initial Chief Eng	Action Description Chief Eng	Sign & Date			

NOTE: Date & initial all entries

H:\fFORMS\Quality Assurance\approved QA\NCRWO RevE

Picklist Print

Wednesday, December 22, 2010 2:58:11 PM

6

Work Order ID: 64909

Parent Item: D350-591-312

Parent Item Name: Heli-Access-Step, Long RH

Start Date: 12/22/2010 **Required Date:** 1/24/2011

Start Qty: 10.00 **Required Qty:** 10.00

Comments:
IPP Rev:A□04.03.22□New issue □KJ/RF□
IPP Rev:B 07-06-09 Added D3572-1 JLM
IPP Rev:C 08-04-02 ECN1163 DD verified by:EC
IPP Rev:D 08-04-08 ECN1164 DD verified by:eC IPP Rev:D
fixe route seq in bom DD 10.04.28 verified by:EC

Component Item ID/ Item Name	Replacement Item ID	Mfg/ Purch	Bin Item	Primary Location	Last Location	Route Seq ID	Unit of Measure	Qty on Hand	Qty per Kit	Total Qty	Qty Issued	Date Issued	Status
D3272-1		Manufactured	No			110	Each	0.0000	1	10	11·01·12	B64912	
Step													
D3067-1		Manufactured	No			110	Each	116.0000	1	10	11·07·12		
End Plate													
				Location		**Loc Qty**		**Loc Code**					
				WA		116							
					60141	2							
					62664	6							
					63550	108				8			
D3219-1		Manufactured	No			110	Each	113.0000	2	20	11·01·12		
Plate													
				Location		**Loc Qty**		**Loc Code**					
				WA		113							
					63551	113				16			
D3066-1		Manufactured	No			180	Each	86.0000	2	20	11·01·18		
Spacer													
				Location		**Loc Qty**		**Loc Code**					
				WA		86							
					63549	86				16			

Dart Aerospace Ltd

W/O:		WORK ORDER CHANGES					
DATE	STEP	PROCEDURE CHANGE	By	Date	Qty	Approval Chief Eng / Prod Mgr	Approval QC Inspector

Part No: _____ **PAR #:** _____ **Fault Category:** _____ **NCR:** Yes No **DQA:** _____ **Date:** _____

Resolution: _____ **Disposition:** _____ **QA: N/C Closed:** _____ **Date:** _____

NCR:		WORK ORDER NON-CONFORMANCE (NCR)						
DATE	STEP	Description of NC Section A	Corrective Action Section B			Verification Section C	Approval Chief Eng	Approval QC Inspector
			Initial Chief Eng	Action Description Chief Eng	Sign & Date			

NOTE: Date & initial all entries

H:\fFORMS\Quality Assurance\approved QA\NCRWO RevE

Picklist Print

Wednesday, December 22, 2010 2:58:11 PM

10

Work Order ID: 64909

Parent Item: D350-591-312

Parent Item Name: Heli-Access-Step, Long RH

Start Date: 12/22/2010 **Required Date:** 1/24/2011

Start Qty: 10.00 **Required Qty:** 10.00

MS20600-AD4W4	Purchased	No	180	Each	2,351.000	16	160	11·01·18
Rivets								

Location	Loc Qty	Loc Code	
ST321	2351		
113368	38		
114181	11		
114718	2		
115573	147		
115640	31		
116022	622		128
116188	1500		

D3065-041	Manufactured	No	180	Each	42.0000	1	10	11·01·18
Step Leg Assembly Hi								

Location	Loc Qty	Loc Code	
WA	42		
63324	2		
63555	40		8

D3067-1	Manufactured	No	180	Each	116.0000	1	10	11·01·18
End Plate								

Location	Loc Qty	Loc Code	
WA	116		
60141	2		
62664	6		
63550	108		8

Dart Aerospace Ltd

W/O:		WORK ORDER CHANGES					
DATE	STEP	PROCEDURE CHANGE	By	Date	Qty	Approval Chief Eng / Prod Mgr	Approval QC Inspector

Part No: _____ **PAR #:** _____ **Fault Category:** _____ **NCR:** Yes No **DQA:** _____ **Date:** _____

Resolution: _____ **Disposition:** _____ **QA: N/C Closed:** _____ **Date:** _____

NCR:		WORK ORDER NON-CONFORMANCE (NCR)						
DATE	STEP	Description of NC Section A	Corrective Action Section B			Verification Section C	Approval Chief Eng	Approval QC Inspector
			Initial Chief Eng	Action Description Chief Eng	Sign & Date			

NOTE: Date & initial all entries

H:\fFORMS\Quality Assurance\approved QA\NCRWO RevE

Picklist Print

Wednesday, December 22, 2010 2:58:11 PM

Work Order ID: 64909

Parent Item: D350-591-312

Parent Item Name: Heli-Access-Step, Long RH

Start Date: 12/22/2010 **Required Date:** 1/24/2011

Start Qty: 10.00 **Required Qty:** 10.00

AN3-35A Bolt		Purchased	No	250	Each	118.0000	2	20	M116549

Location	Loc Qty	Loc Code
ST353	118	
116191	100	
116419	18	

D3235-1 Mounting Lug		Manufactured	No	250	Each	61.0000	2	20	

Location	Loc Qty	Loc Code
ST471	61	
61845	1	
63547	60	

D3278-041 Support Assembly		Manufactured	No	250	Each	8.0000	1	10	63553

Location	Loc Qty	Loc Code
ST460	8	
64731	8	

AN960JD416 Washer	NAS1149D0463J	Purchased	No	250	Each	30.0000	16	160	M116304

Location	Loc Qty	Loc Code
ST300	24	
113288	24	
ST356	6	
115622	6	

Dart Aerospace Ltd

W/O:		WORK ORDER CHANGES					
DATE	STEP	PROCEDURE CHANGE	By	Date	Qty	Approval Chief Eng / Prod Mgr	Approval QC Inspector

Part No: _____ **PAR #:** _____ **Fault Category:** _____ **NCR:** Yes No **DQA:** _____ **Date:** _____

Resolution: _____ **Disposition:** _____ **QA: N/C Closed:** _____ **Date:** _____

NCR:		WORK ORDER NON-CONFORMANCE (NCR)						
DATE	STEP	Description of NC Section A	Corrective Action Section B			Verification Section C	Approval Chief Eng	Approval QC Inspector
			Initial Chief Eng	Action Description Chief Eng	Sign & Date			

NOTE: Date & initial all entries

H:\fFORMS\Quality Assurance\approved QA\NCRWO RevE

Picklist Print

Wednesday, December 22, 2010 2:58:11 PM

Work Order ID: 64909

Parent Item: D350-591-312

Parent Item Name: Heli-Access-Step, Long RH

Start Date: 12/22/2010 **Required Date:** 1/24/2011

Start Qty: 10.00 **Required Qty:** 10.00

AN960JD516	NAS1149D0563J	Purchased	No	250	Each	34.0000	4	1	4032X M114742 11/1/2011
Washer									

Location	Loc Qty	Loc Code
ST	34	
103694	18	
107534	12	
109287	4	

AN5-36A		Purchased	No	250	Each	101.0000	2	20	11/1/20
Bolt									

Location	Loc Qty	Loc Code
ST341	101	
114292	1	
116191	100	

D2618		Manufactured	No	250	Each	36.0000	2	20	B65071 11/1/2011
Bushing									

Location	Loc Qty	Loc Code
ST019	36	
63548	36	

D2230-3		Manufactured	No	250	Each	94.0000	4	40	B65067 11/1/2011
Lug									

Location	Loc Qty	Loc Code
ST476	94	
55452	2	
63312	12	
64422	80	

Dart Aerospace Ltd

W/O:		WORK ORDER CHANGES					
DATE	STEP	PROCEDURE CHANGE	By	Date	Qty	Approval Chief Eng / Prod Mgr	Approval QC Inspector

Part No: _____ **PAR #:** _____ **Fault Category:** _____ **NCR:** Yes No **DQA:** _____ **Date:** _____

Resolution: _____ **Disposition:** _____ **QA: N/C Closed:** _____ **Date:** _____

NCR:		WORK ORDER NON-CONFORMANCE (NCR)						
DATE	STEP	Description of NC Section A	Corrective Action Section B			Verification Section C	Approval Chief Eng	Approval QC Inspector
			Initial Chief Eng	Action Description Chief Eng	Sign & Date			

NOTE: Date & initial all entries

H:\fFORMS\Quality Assurance\approved QA\NCRWO RevE

Picklist Print

Wednesday, December 22, 2010 2:58:11 PM

Work Order ID: 64909

Parent Item: D350-591-312

Parent Item Name: Heli-Access-Step, Long RH

Start Date: 12/22/2010 **Required Date:** 1/24/2011

Start Qty: 10.00 **Required Qty:** 10.00

D2856-400	Manufactured	No	250	f	275.2930	1.2	12	

Abraison Strip

Location	Loc Qty	Loc Code
ST403	275.2930421	
56626	0.00004211	
59920	59.293	
63735	216	

cut (2) D2856-400-720 as per dwg

MS21042L3	Purchased	No	250	Each	1,870.000	2	20	

Nut

Location	Loc Qty	Loc Code
ST300	1870	
114784	9	
115835	957	
116373	4	
116391	900	

AN4-13A	Purchased	No	250	Each	274.0000	8	80	

Bolt

Location	Loc Qty	Loc Code
ST357	274	
116191	274	

Dart Aerospace Ltd

W/O:		WORK ORDER CHANGES					
DATE	STEP	PROCEDURE CHANGE	By	Date	Qty	Approval Chief Eng / Prod Mgr	Approval QC Inspector

Part No: _____ **PAR #:** _____ **Fault Category:** _____ **NCR:** Yes No **DQA:** _____ **Date:** _____

Resolution: _____ **Disposition:** _____ **QA: N/C Closed:** _____ **Date:** _____

NCR:		WORK ORDER NON-CONFORMANCE (NCR)						
DATE	STEP	Description of NC Section A	Corrective Action Section B			Verification Section C	Approval Chief Eng	Approval QC Inspector
			Initial Chief Eng	Action Description Chief Eng	Sign & Date			

NOTE: Date & initial all entries

H:\fFORMS\Quality Assurance\approved QA\NCRWO RevE

Picklist Print

Wednesday, December 22, 2010 2:58:11 PM

Work Order ID: 64909

Parent Item: D350-591-312

Parent Item Name: Heli-Access-Step, Long RH

Start Date: 12/22/2010 **Required Date:** 1/24/2011

Start Qty: 10.00 **Required Qty:** 10.00

MS21042L5		Purchased	No	250	Each	1,199.000	2	20	11/1/20
Nut									

Location	Loc Qty	Loc Code	
ST139	26		
114813	26		
ST300	1173		
115156	5		
115594	500		
116104	172		16
116105	496		

MS21042L4		Purchased	No	250	Each	4,242.000	8	80	11/1/20
Nut									

Location	Loc Qty	Loc Code	
ST300	4242		
1123143	2		
115589	10		
115621	730		64
116188	3500		

AN960JD10	NAS1149D0363J	Purchased	No	250	Each	8.0000	4	40	M115104 32 11/1/20
Washer									

Location	Loc Qty	Loc Code	
ST	6		
107715	6		
ST335	2		
105792	2		

Dart Aerospace Ltd

W/O:		WORK ORDER CHANGES					
DATE	STEP	PROCEDURE CHANGE	By	Date	Qty	Approval Chief Eng / Prod Mgr	Approval QC Inspector

Part No: _____ **PAR #:** _____ **Fault Category:** _____ **NCR:** Yes No **DQA:** _____ **Date:** _____

Resolution: _____ **Disposition:** _____ **QA: N/C Closed:** _____ **Date:** _____

NCR:		WORK ORDER NON-CONFORMANCE (NCR)						
DATE	STEP	Description of NC Section A	Corrective Action Section B			Verification Section C	Approval Chief Eng	Approval QC Inspector
			Initial Chief Eng	Action Description Chief Eng	Sign & Date			

NOTE: Date & initial all entries

H:\fFORMS\Quality Assurance\approved QA\NCRWO RevE

DESIGN	DRAWN BY	DART AEROSPACE LTD HAWKESBURY, ONTARIO, CANADA	
CHECKED	APPROVED	DRAWING NO. D3272	REV. B SHEET 1 OF 3
DATE 07.05.18		TITLE STEP ASSEMBLY, HI LONG	SCALE NTS

A	04.03.01	NEW ISSUE
B	07.05.18	D3272-1 WAS D2622-120

RELEASED
07 06 04

QTY -041	QTY -042	PART NUMBER	DESCRIPTION
X		**D3272-041**	**STEP ASSEMBLY, HIGH LONG (LH)**
	X	**D3272-042**	**STEP ASSEMBLY, HIGH LONG (RH)**
1	1	D3065-041	LEG ASSEMBLY
2	2	D3066-1	SPACER
2	2	D3067-1	END PLATE
2	2	D3219-1	SUPPORT
1	1	D3272-1	STEP
16	16	MS20600AD4W4	RIVET

B

GENERAL NOTES:

1) D3272-041 SHOWN. FOR D3272-042, INSTALL D3219-1 SUPPORT OPPOSITE SIDE
2) WELD PER DART QSI 004
3) FINISH: CHEMICAL CONVERSION COAT PER DART QSI 005.4.1
   POWDER COAT ASSEMBLY WHITE (4.3.5.1) PER DART QSI 005 4.3
   BLACK ANTI-SKID PAINT PER DART QSI 005 4.4
4) TOLERANCES ARE PER DART QSI 018 UNLESS OTHERWISE NOTED.
5) ALL DIMENSIONS ARE IN INCHES UNLESS OTHERWISE NOTED.
6) BREAK ALL SHARP EDGES 0.005 TO 0.010 MAX.

SHOP COPY
RETURN TO
ENGINEERING
UNCONTROLLED COPY
SUBJECT TO AMENDMENT
WITHOUT NOTICE
WORK ORDER
NO. 021909
10-12-22

Copyright © 2004 by DART AEROSPACE LTD
THIS DOCUMENT IS PRIVATE AND CONFIDENTIAL AND IS SUPPLIED ON THE EXPRESS CONDITION THAT IT IS NOT TO BE USED FOR ANY PURPOSE OR COPIED OR COMMUNICATED TO ANY OTHER PERSON WITHOUT WRITTEN PERMISSION FROM DART AEROSPACE LTD.

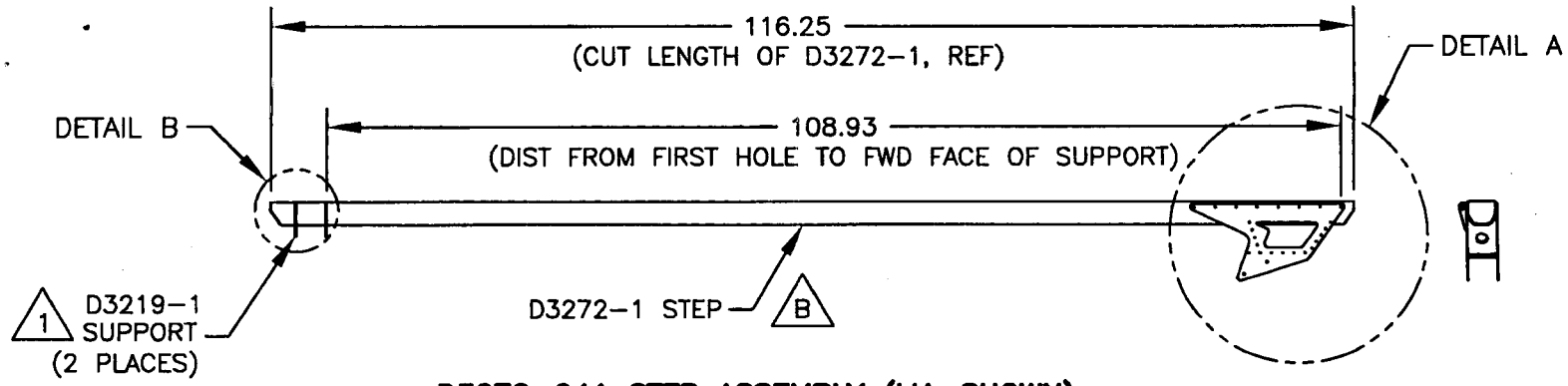

D3272-041 STEP ASSEMBLY (LH, SHOWN)

D3272-042 STEP ASSEMBLY (RH, OPPOSITE)

WO 64909

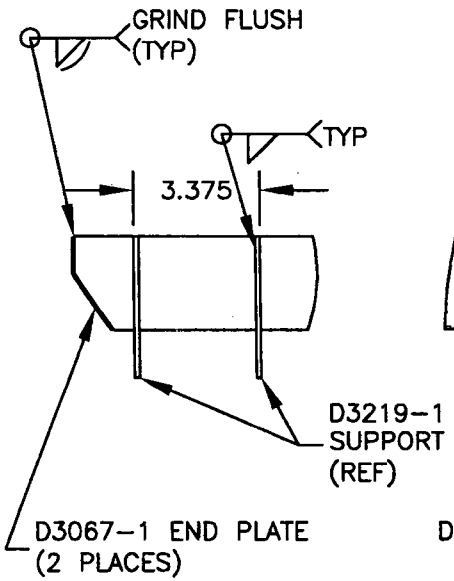

DETAIL B
(SCALE 1:5)

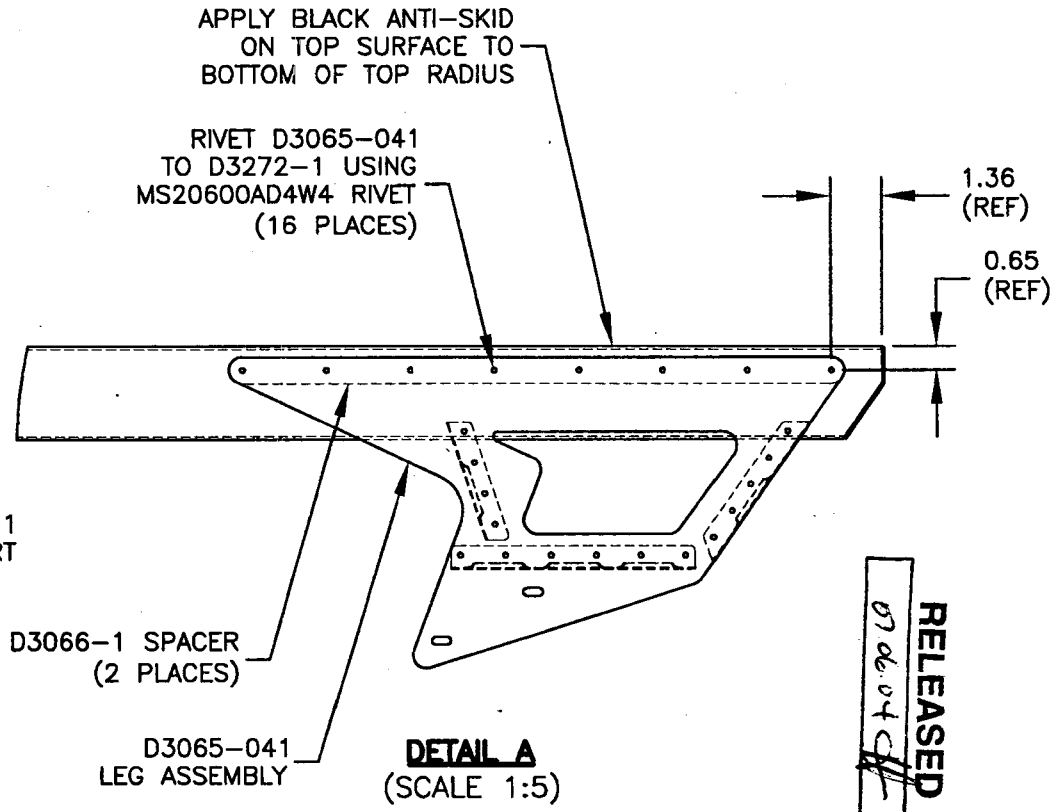

DETAIL A
(SCALE 1:5)

RELEASED
07.06.04

DESIGN	DRAWN BY	DART AEROSPACE LTD HAWKESBURY, ONTARIO, CANADA
CHECKED	APPROVED	DRAWING NO. D3272 — REV. B
DATE 07.05.18		SHEET 2 OF 3
		TITLE STEP ASSEMBLY, HI LONG — SCALE 1:20

Copyright © 2004 by DART AEROSPACE LTD
THIS DOCUMENT IS PRIVATE AND CONFIDENTIAL AND IS SUPPLIED ON THE EXPRESS CONDITION THAT IT IS NOT TO BE USED FOR ANY PURPOSE OR COPIED OR COMMUNICATED TO ANY OTHER PERSON WITHOUT WRITTEN PERMISSION FROM DART AEROSPACE LTD.

DESIGN	DRAWN BY	DART AEROSPACE LTD HAWKESBURY, ONTARIO, CANADA	
CHECKED	APPROVED	DRAWING NO. D3272	REV. B SHEET 3 OF 3
DATE 07.05.18		TITLE STEP ASSEMBLY, HI LONG	SCALE 1:20

RELEASED
07.06.04

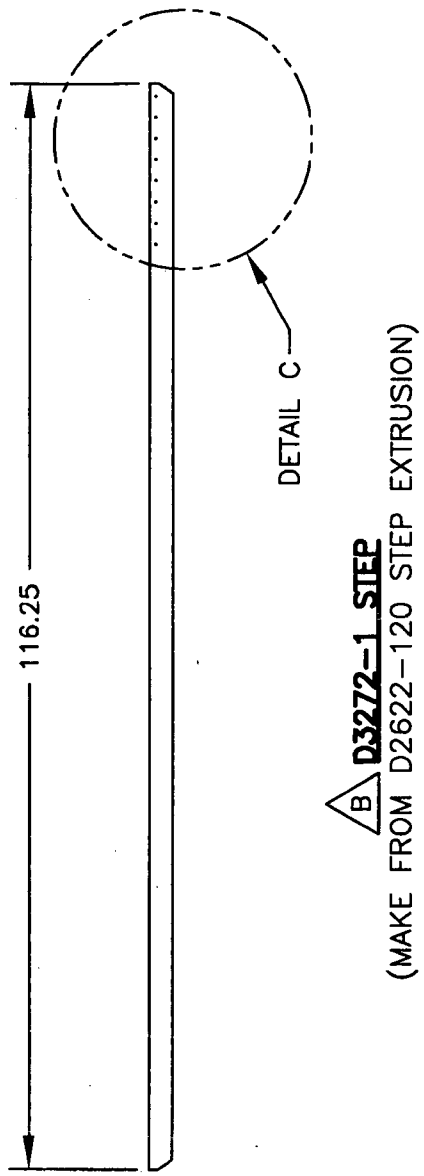

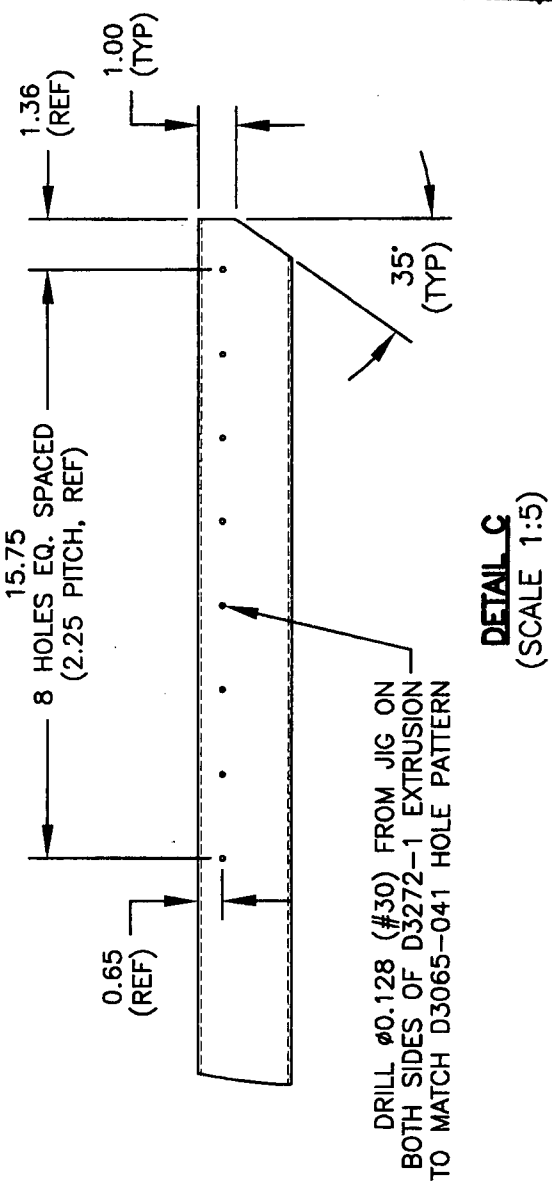

Copyright © 2004 by DART AEROSPACE LTD
THIS DOCUMENT IS PRIVATE AND CONFIDENTIAL AND IS SUPPLIED ON THE EXPRESS CONDITION THAT IT IS NOT TO BE USED FOR ANY PURPOSE OR COPIED OR COMMUNICATED TO ANY OTHER PERSON WITHOUT WRITTEN PERMISSION FROM DART AEROSPACE LTD.

Qty -211	Qty -212	Qty -213	Qty -214	Qty -215	Qty -216	Qty -311	Qty -312	Part Number	Description
X								D350-591-211	***Heli-Access-Step***™, Long Step – High Skid, LH
	X							D350-591-212	***Heli-Access-Step***™, Long Step – High Skid, RH
		X						D350-591-213	***Heli-Access-Step***™, Short Step – High Skid, LH
			X					D350-591-214	***Heli-Access-Step***™, Short Step – High Skid, RH
				X				D350-591-215	***Heli-Access-Step***™, Short Step – Low Skid, LH
					X			D350-591-216	***Heli-Access-Step***™, Short Step – Low Skid, RH
						X		D350-591-311	***Heli-Access-Step***™, Long Step – High Skid, LH
							X	D350-591-312	***Heli-Access-Step***™, Long Step – High Skid, RH
1								D3070-041	STEP ASSEMBLY (HIGH-LONG, LH)
	1							D3070-042	STEP ASSEMBLY (HIGH-LONG, RH)
		1						D3078-041	STEP ASSEMBLY (HIGH-SHORT, LH)
			1					D3078-042	STEP ASSEMBLY (HIGH-SHORT, RH)
				1				D3168-041	STEP ASSEMBLY (LOW-SHORT, LH)
					1			D3168-042	STEP ASSEMBLY (LOW-SHORT, RH)
						1		D3272-041	STEP ASSEMBLY (HIGH-LONG, LH)
							1	D3272-042	STEP ASSEMBLY (HIGH-LONG, RH)
4	4							D2182B035	RUBBER CUSHION
		2	2	2	2			D2230-1	MOUNTING LUG
		2	2	2	2	4	4	D2230-3	MOUNTING LUG
8	8							D2274	RADIUS BLOCK
						2	2	D2618	BUSHING
4	4	4	4	4	4			D2732-030	CUSHION
2	2	1	1	1	1	2	2	D2856-400-720	ABRASION STRIP
2	2							D3064-1	CLAMP
1	1							D3079-041	SUPPORT ASSEMBLY
4	4							D3080-1	CLAMP
						2	2	D3235-1	MOUNTING LUG
						1	1	D3278-041	SUPPORT ASSEMBLY
2	2	2	2	2	2	2	2	AN3-35A	BOLT
10	10	2	2	2	2			AN4-11A	BOLT
		4	4	4	4	8	8	AN4-13A	BOLT
						2	2	AN5-36A	BOLT
4	4	4	4	4	4	4	4	AN960JD10	WASHER
20	20	12	12	12	12	16	16	AN960JD416	WASHER
						4	4	AN960JD516	WASHER
2	2	2	2	2	2	2	2	MS21042L3	NUT
10	10	6	6	6	6	8	8	MS21042L4	NUT
						2	2	MS21042L5	NUT
						1	1	*DSI 9410-011	STEP MODIFICATION KIT

*DSI 9410-011 Step Modification Kits are provided with all D350-591-311 and D350-591-312 Steps. This kit is provided as an option for the installer and is therefore **NOT REQUIRED** to complete the installation of the D350-591-311 or D350-591-312 Steps. Refer to Figure 21 for installation of the DSI 9410-011 Kit.

• COPYRIGHT © 1993 BY DART AEROSPACE LTD •
THIS DOCUMENT IS PRIVATE AND CONFIDENTIAL AND IS SUPPLIED ON THE EXPRESS CONDITION THAT IT IS NOT TO BE USED FOR ANY PURPOSE OR COPIED OR COMMUNICATED TO ANY OTHER PERSON WITHOUT WRITTEN PERMISSION FROM DART AEROSPACE LTD.